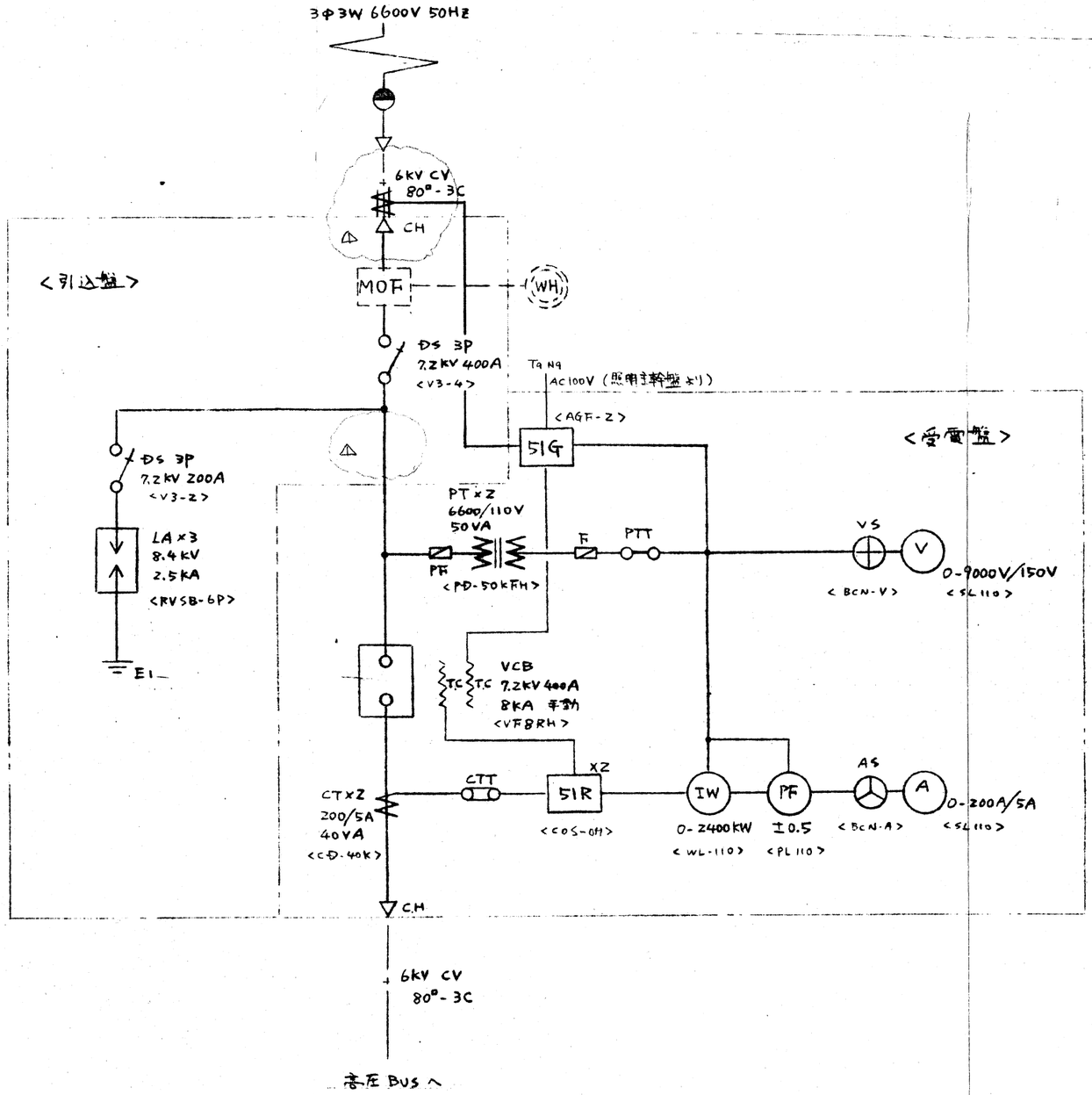

MESSERS 熊谷市役所					REV	△1	△2	△3
					DW'N	根来		
					DATE	57.1.30		
STOCK	ISSUED	SCALE		CHIEF	DW'N	古川	TITLE 単線結線図	
		DATE	56.6.10	APP	CH'D			
	DMG. CODE	STD. DWG. NO			DWG. NO.	3T5A-3K04	E121	1/- △ PAGE ✓

KURITA

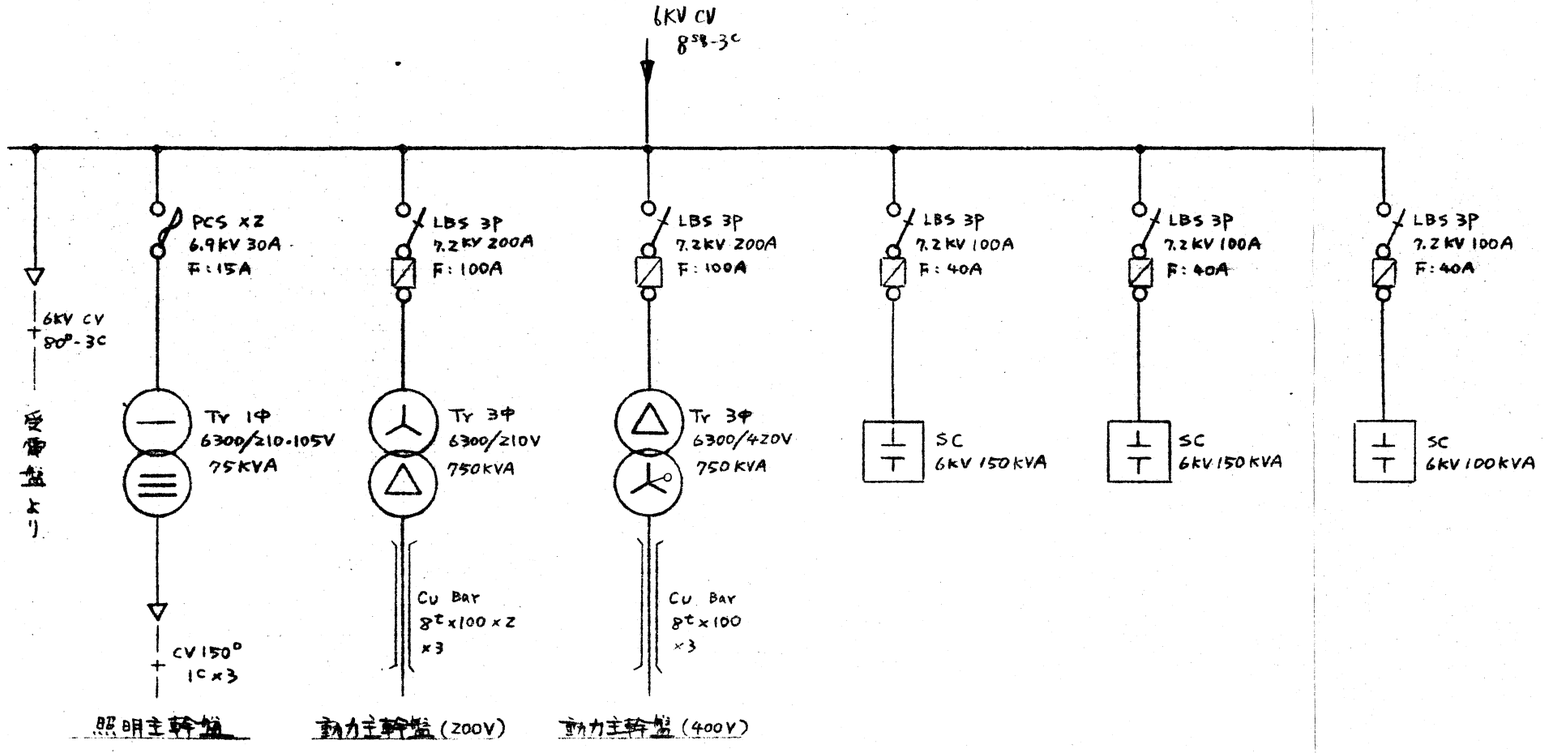

MESSERS 熊谷市役所殿					REV	△1	△2	△3
					DW'N			
					DATE			
STOCK	ISSUED	SCALE		CHIEF	DW'N 古川	TITLE 単線結線図		
		DATE	56.6.10	APP	CH'D			
	DMG. CODE	STD. DWG. NO			DWG. NO. 3T5A-3K04 E121			PAGE 2

KURITA

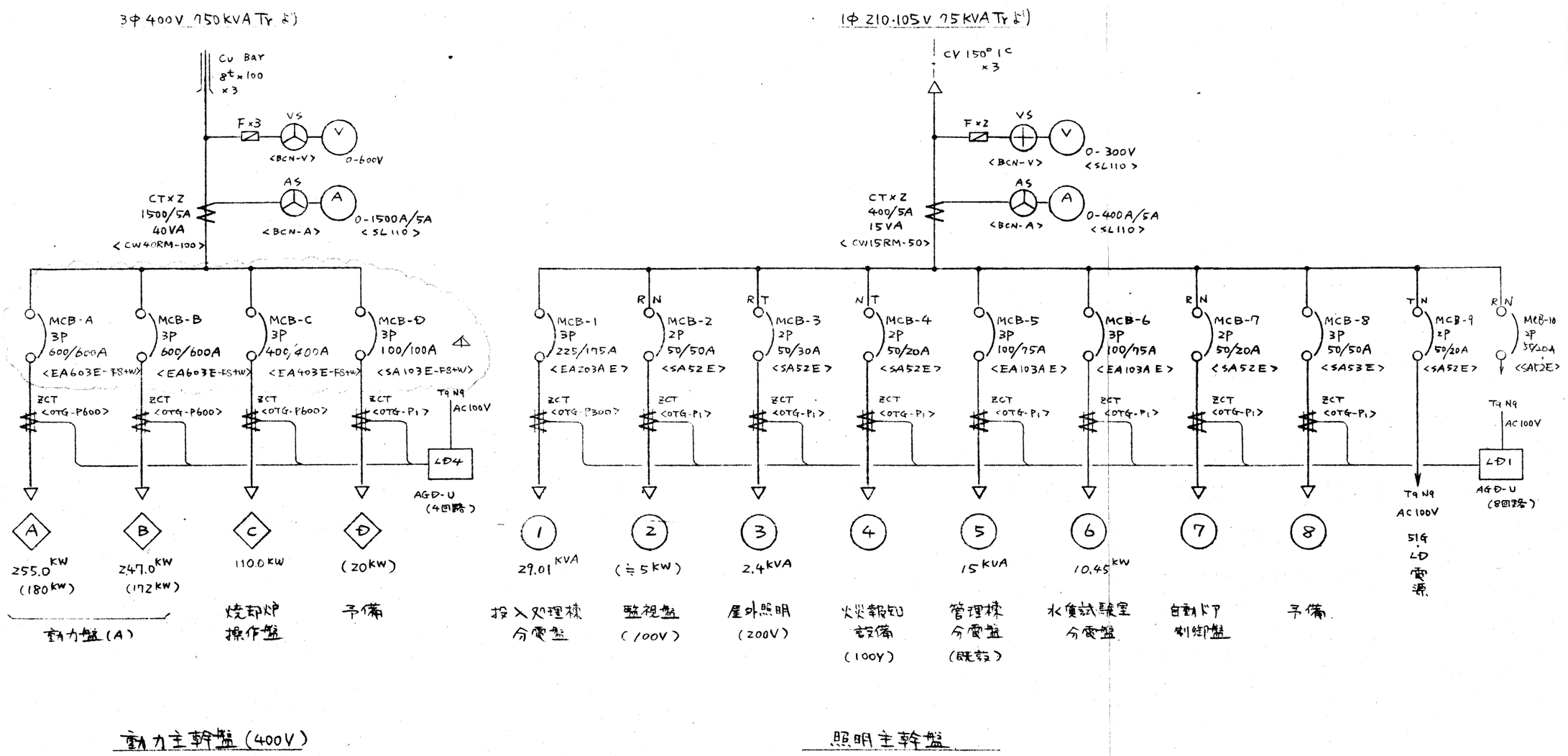

MESSERS 熊谷市役所殿					REV	△1	△2	△3	KURITA
					DW'N	57.1.30			
					DATE				
STOCK	ISSUED	SCALE		CHIEF	DW'N	古川	TITLE 単線結線図 /		
		DATE	56.6.10	APP	CH'D				
	DMG. CODE	STD. DWG. NO			DWG. NO. 3T5A-3K04-E121-3/- △				PAGE 3

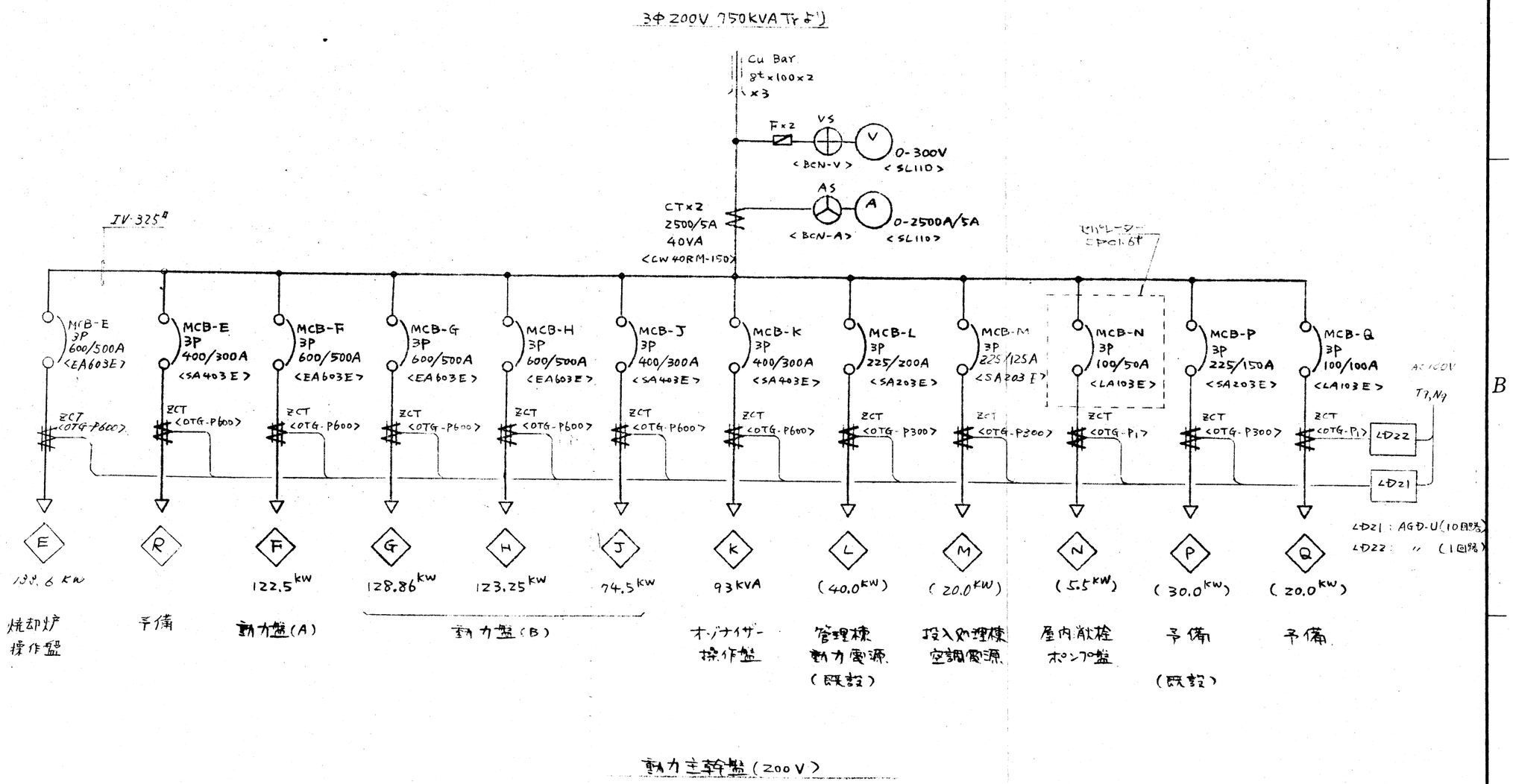

MESSERS 熊谷市役所殿					REV	△1	△2	△3	KURITA
					DW'N				
					DATE				
STOCK	ISSUED	SCALE		CHIEF	DW'N	古川	TITLE 単線結線図 /		
		DATE	56.6.10	APP	CH'D				
	DMG. CODE	STD. DWG. NO			DWG. NO.	ST5A-3K04 - E121 -4/- △			PAGE 4